Biomass based Sustainable Ammonia Production

Antonio Sánchez, Mariano Martín, Pastora Vega

University of Salamanca

13th November 2019

Sustainable Ammonia Production

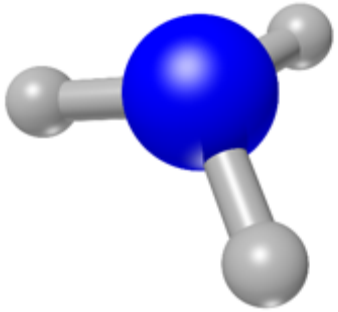

Water Electrolysis + Air Separation + HB Process

Electrochemical formation

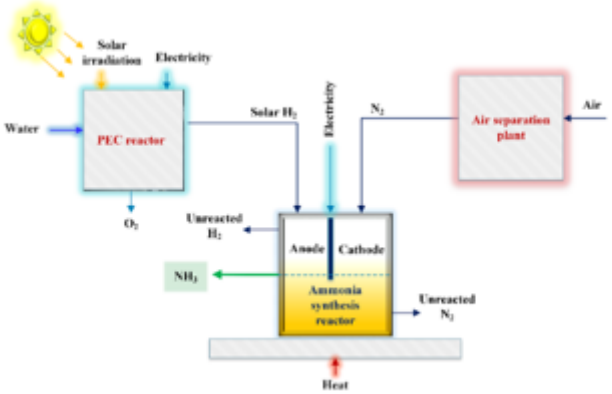

Biomass to ammonia processes

Morgan et al., (2017). ACS Sust. Chem. Eng. 5(11), 9554-9567
Bicer & Dincer (2017), ACS. Sust. Chem. Eng. 5(9), 8035-8043
Sanchez & Martin (2018), Sustain. Product. Consumpt. 16, 176-192

Biomass to Ammonia Process

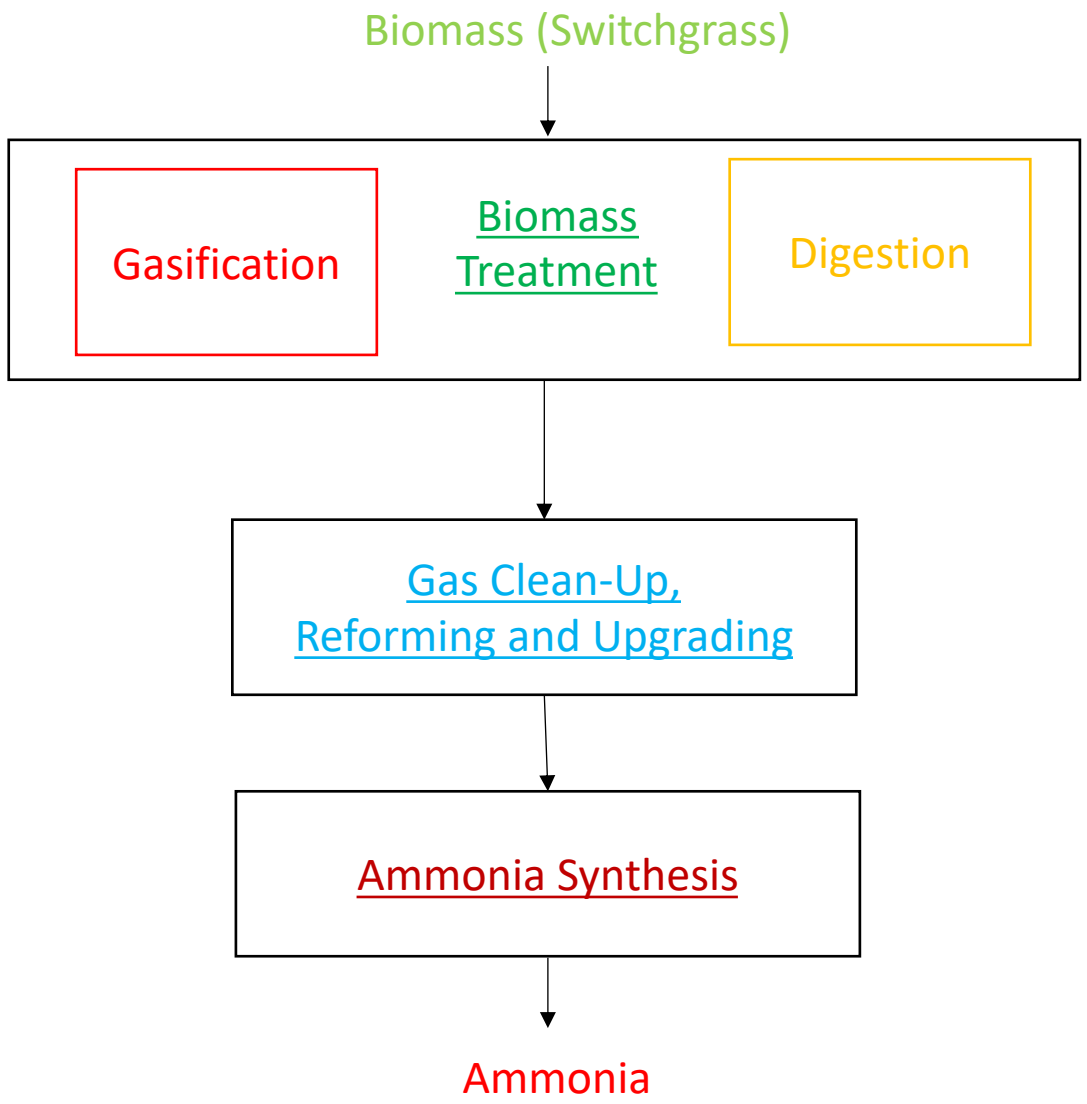

Modelling Issues

A: Indirect Gasification

Total Combustion

$$X = a + bT + cT^2$$

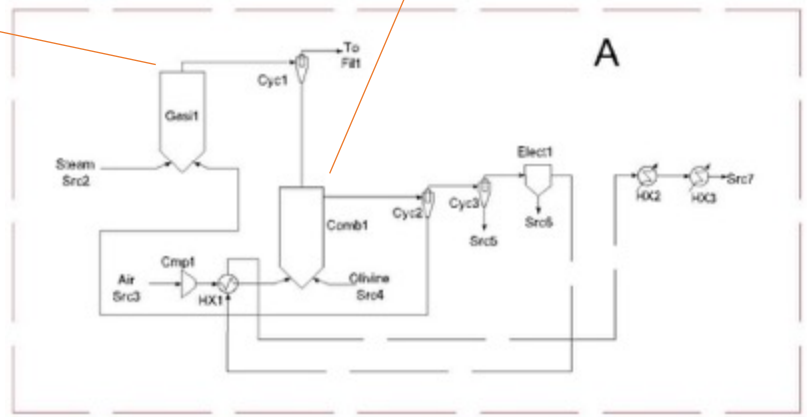

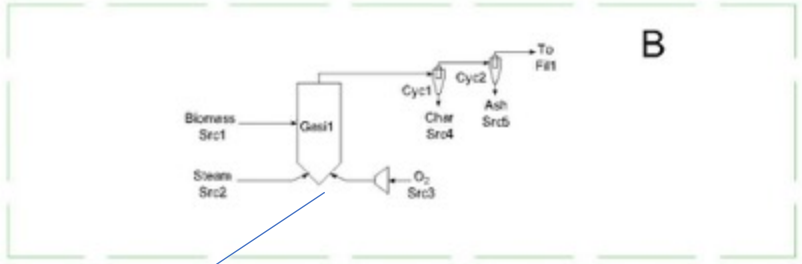

$$f_i = A + B \cdot P + C \cdot T + D \cdot \left(\frac{O_2}{Feed\,C} \right) + E \cdot \left(\frac{H_2O}{Feed\,C} \right)$$

B: Direct Gasification O_2/Steam

C: Direct Gasification Air/Steam

Developed empirical model:

$$Y_i = a_0 + a_1 T + a_2 T^2 + a_3 ER + a_4 ER^2 + a_5 (S/B) + a_6 (S/B)^2 + a_7 OP + a_8 OP^2$$

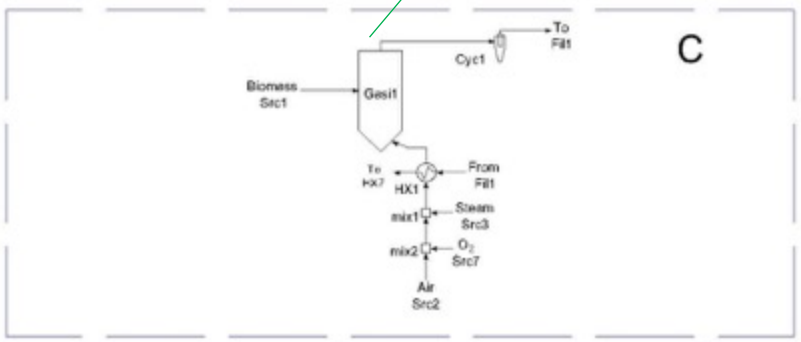

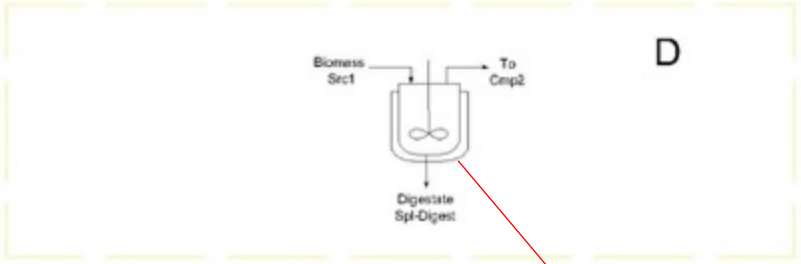

Experimental results + First Principles

D: Anaerobic Digestion

Modelling Issues

$H_2S + ZnO \rightarrow H_2O + ZnS$

Complete conversion

H_2S removal

Reforming Stage

$$C_nH_m + nH_2O \rightarrow nCO + \left(n + \frac{m}{2}\right)H_2$$

$$CH_4 + H_2O \rightleftharpoons 3H_2 + CO$$

$$CO + H_2O \rightleftharpoons H_2 + CO_2$$

Equilibrium conditions

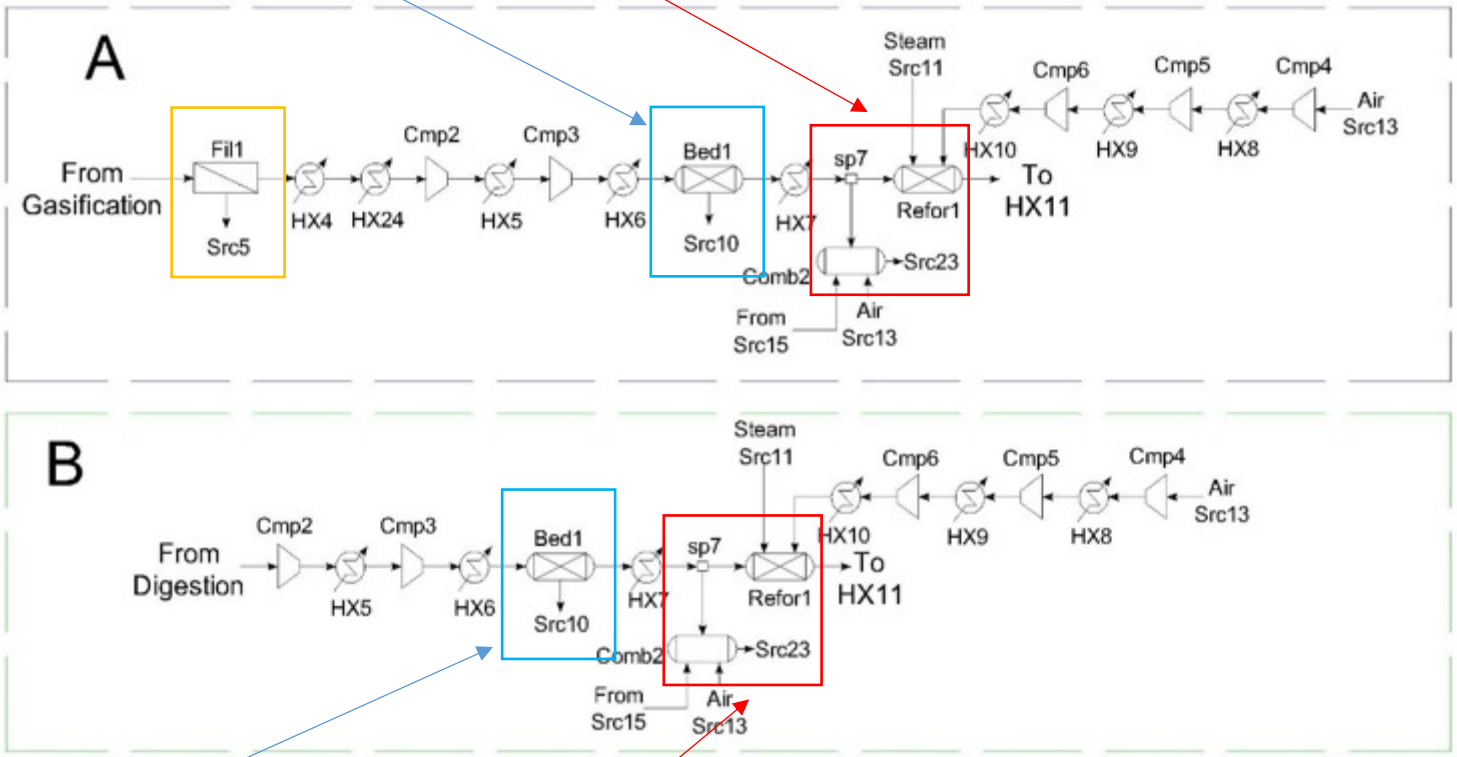

$H_2S + ZnO \rightarrow H_2O + ZnS$

Complete conversion

H_2S removal

Reforming Stage

$$C_nH_m + nH_2O \rightarrow nCO + \left(n + \frac{m}{2}\right)H_2$$

$$CH_4 + H_2O \rightleftharpoons 3H_2 + CO$$

$$CO + H_2O \rightleftharpoons H_2 + CO_2$$

Equilibrium conditions

Modelling Issues

Two temperature levels shift reaction

High temperature: 573-773K

Low temperature: 453-533K

$CO + H_2O \rightleftharpoons CO_2 + H_2$

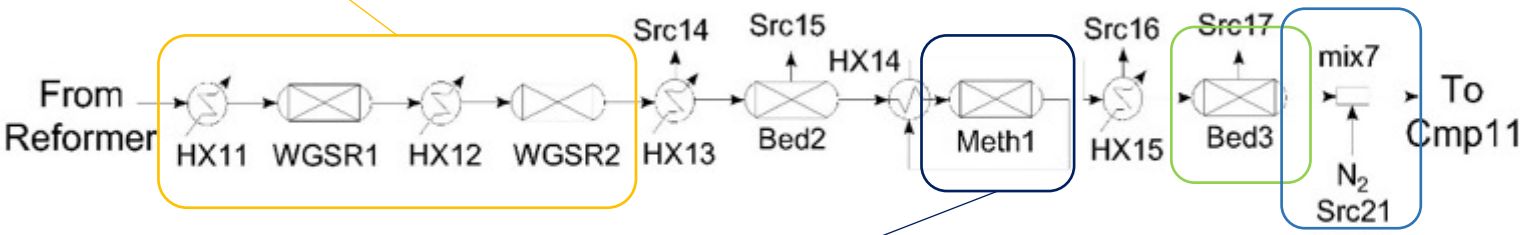

Methanation → Below 10 ppm CO Poison Ammonia Catalyst →

$$CO + 3H_2 \rightleftharpoons CH_4 + H_2O$$

Modelling Issues

Ammonia Synthesis

$$N_2 + 3H_2 \rightleftarrows 2NH_3$$

Kinetics
Pressure drop
Energy integration
Chemical Equilibria

Bounds for the Optimization model
T, X_{bed}, Flows

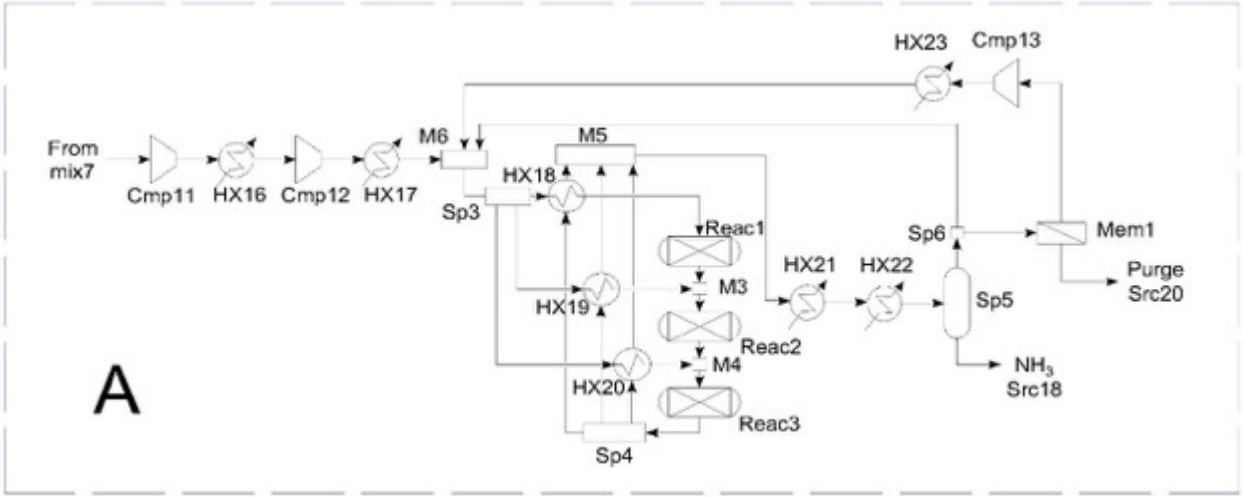

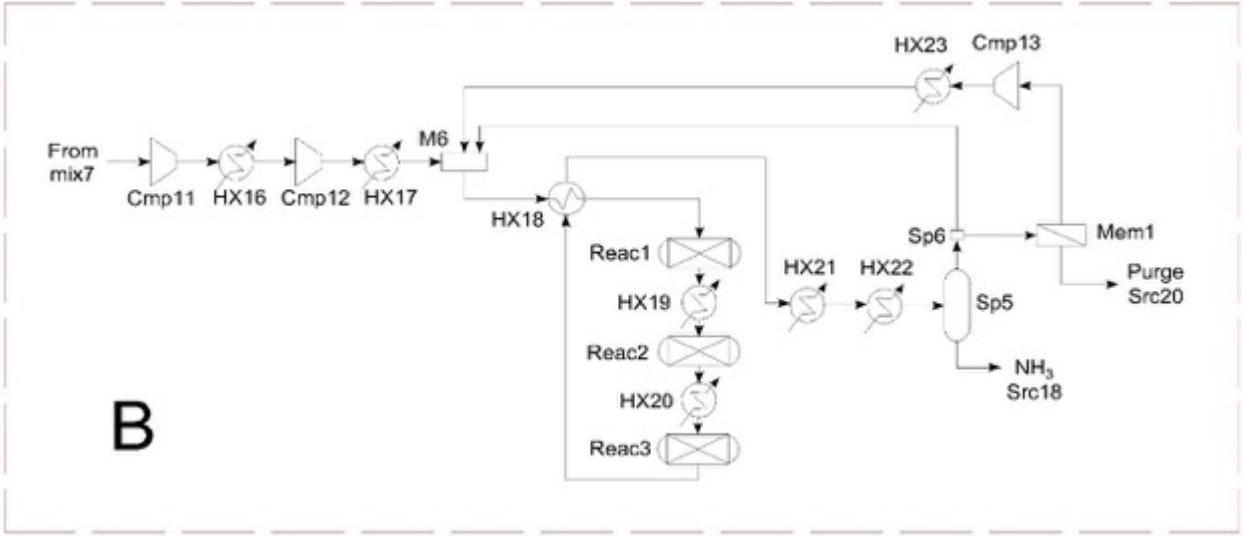

Results

Operating Variables

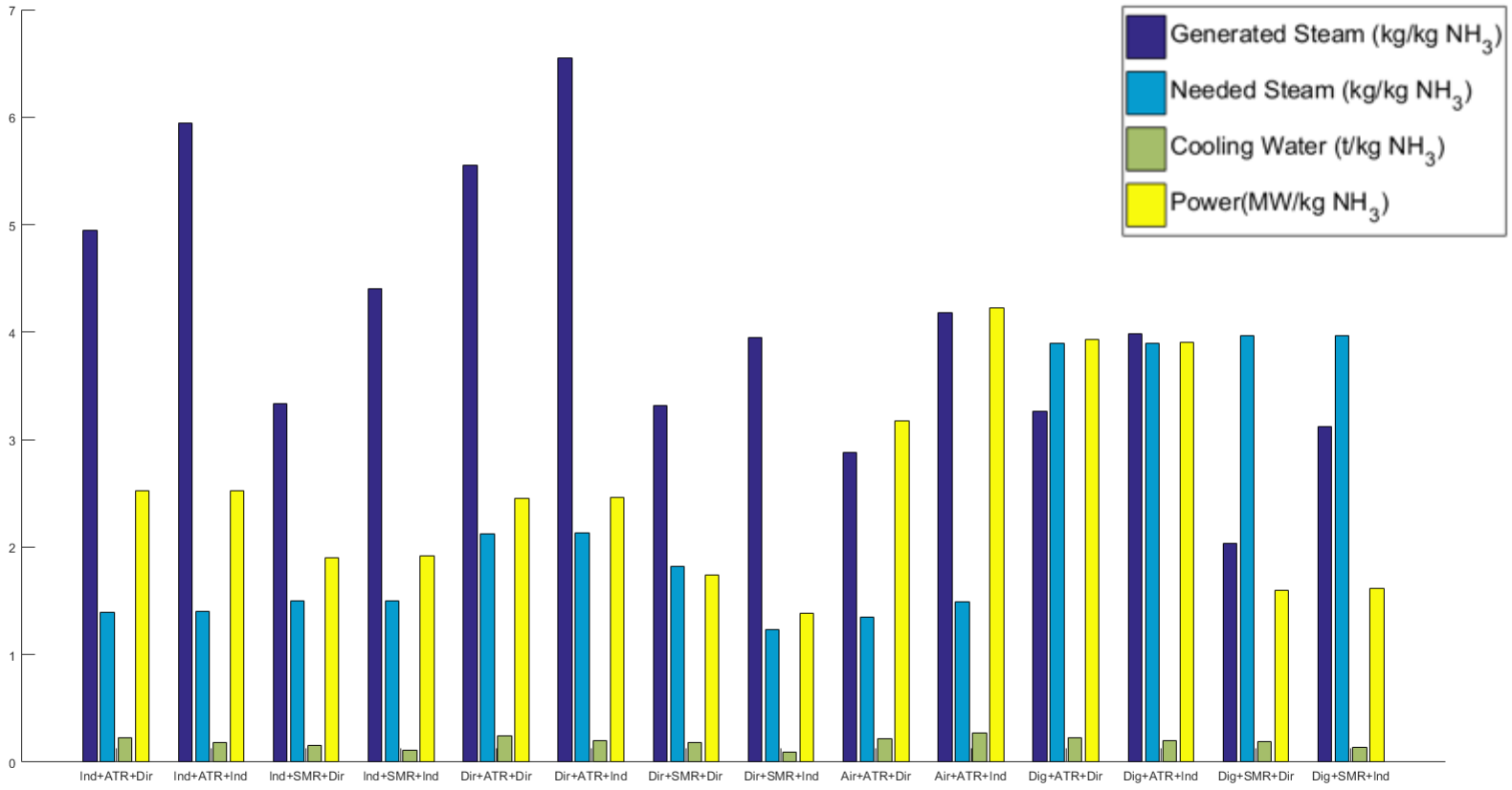

Generated Steam: 2- 6.5 kg Steam/kg NH_3

ATR processes generated more steam than SMR

Indirect cooling ammonia reactor processes generated more steam than the direct cooling alternative

Results

Operating Variables

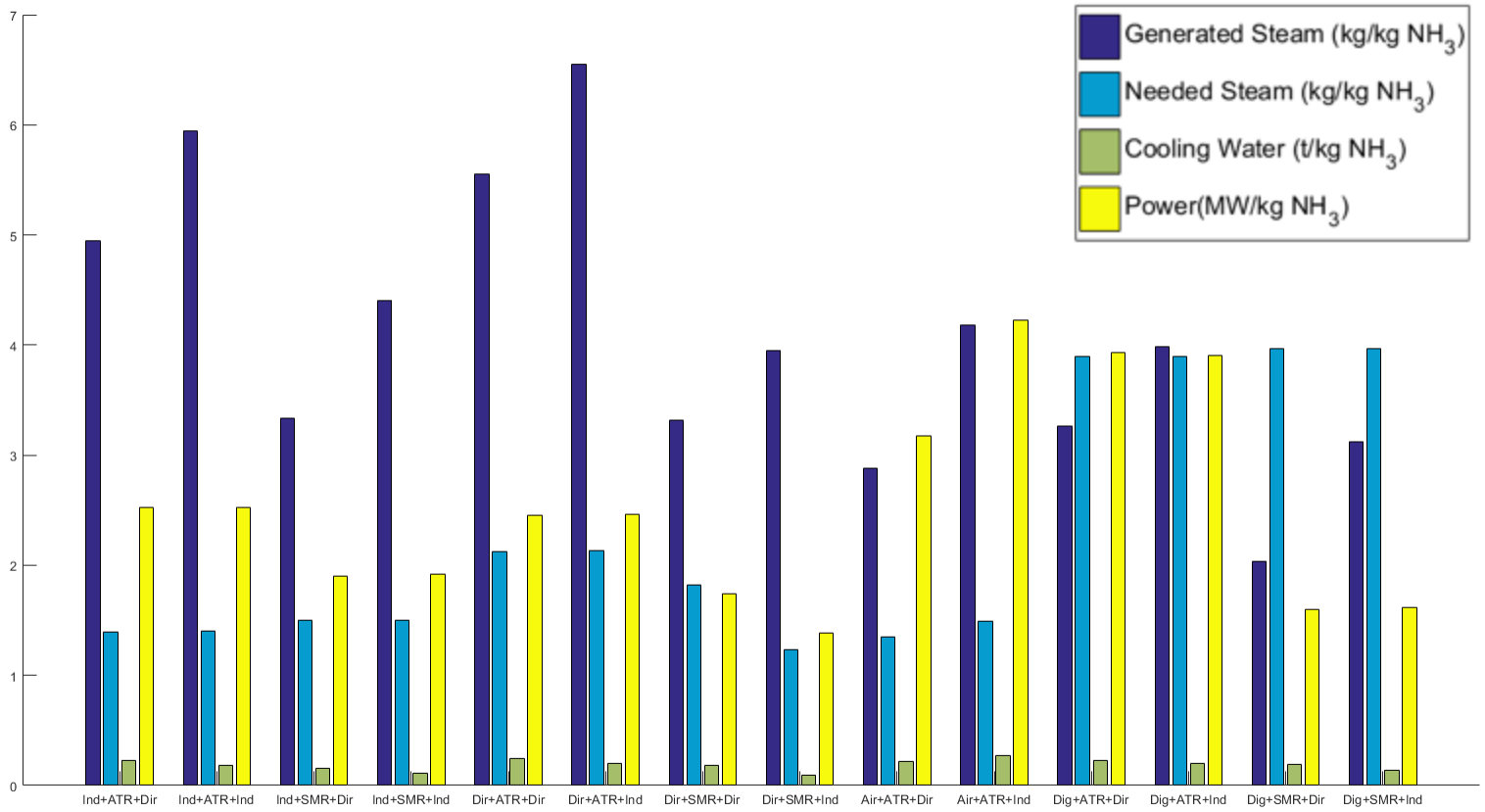

Needed Steam: 1- 4 kg Steam/kg NH_3

More steam needed in the digestion processes

Cooling Water: 0.1 - 0.2 t Water/kg NH_3

Results

Operating Variables

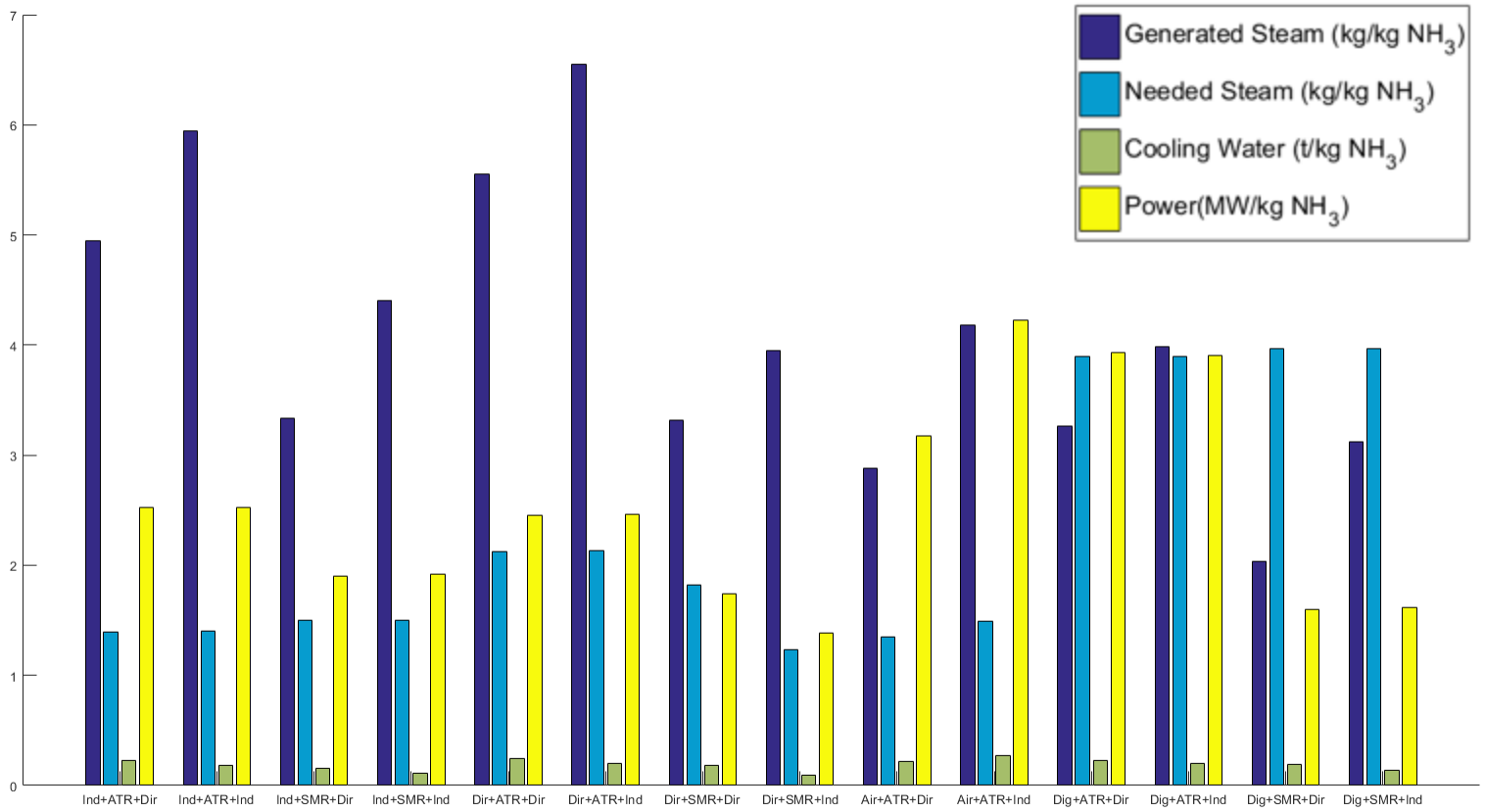

Power: 1- 4 MW/kg NH_3

ATR processes more power consumption than SMR

Results

Economic Results

Capital Costs

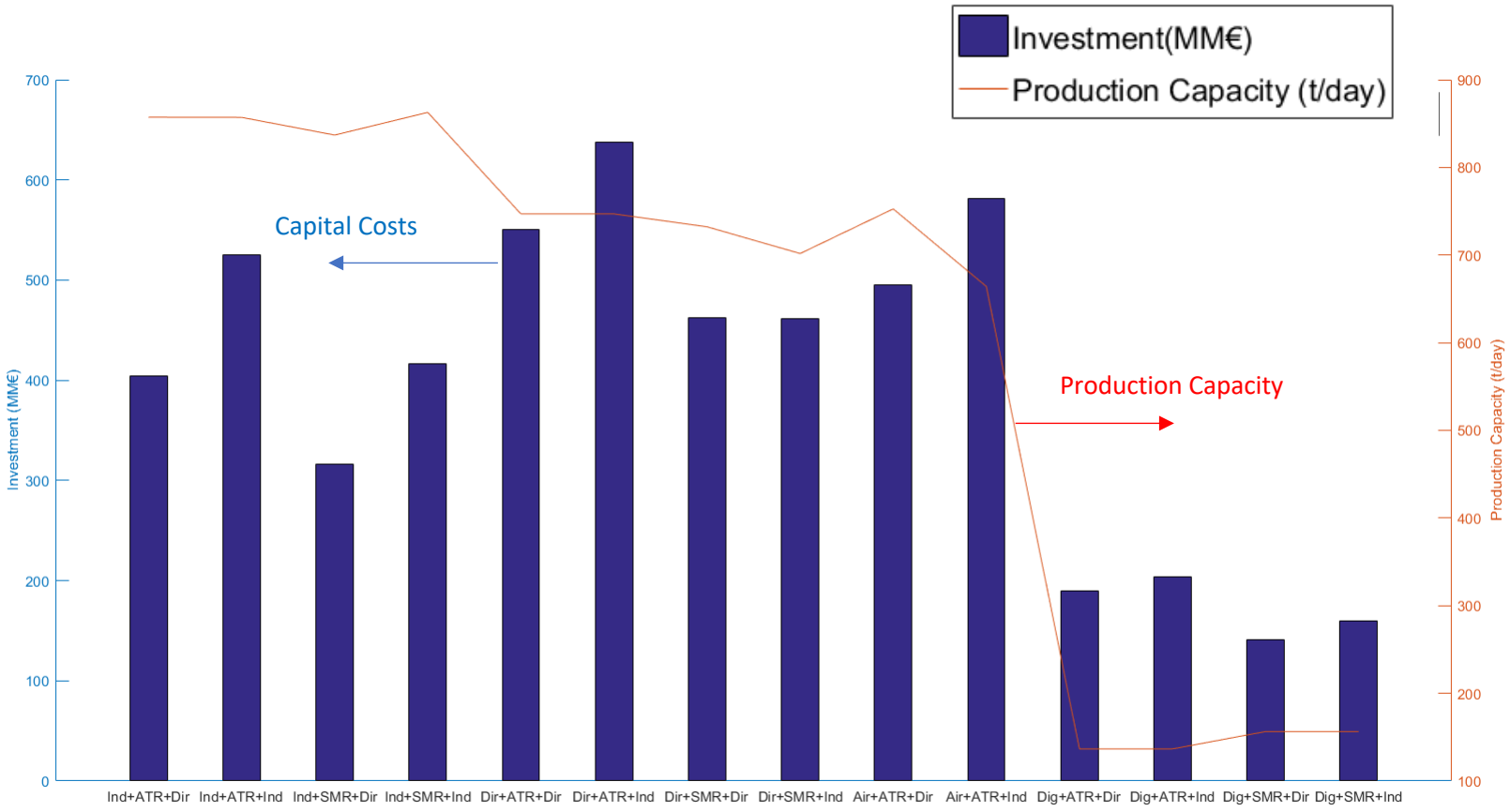

Indirect cooling reactor more investment due to the reactor's heat exchangers

SMR lower investment than ATR

Results

Economic Results

Production Costs

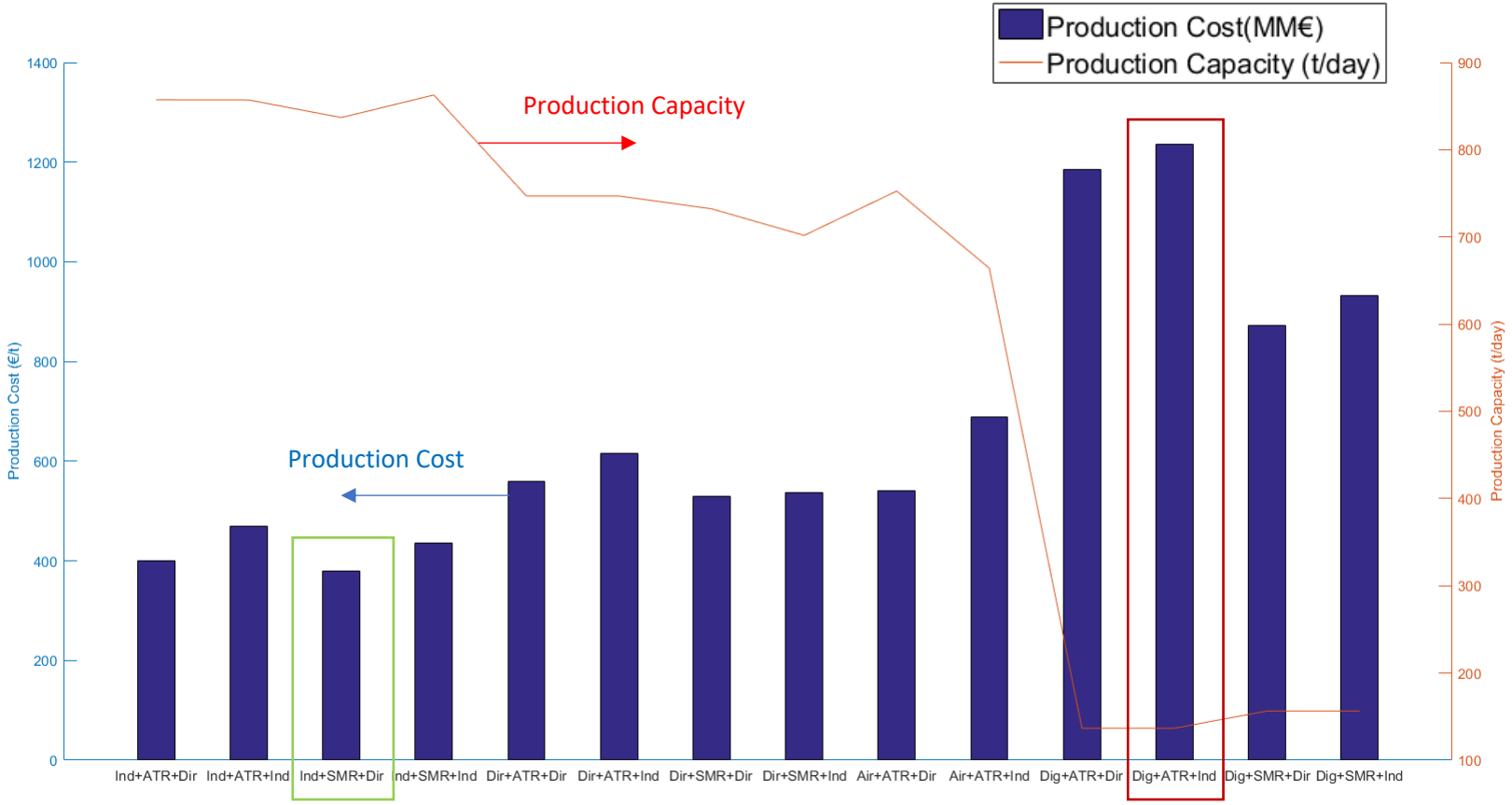

390-1284 €/t

Indirect Gasification, SMR and Direct Cooling is the best alternative

Digestion alternatives: low yield to ammonia

Results

Environmental Index

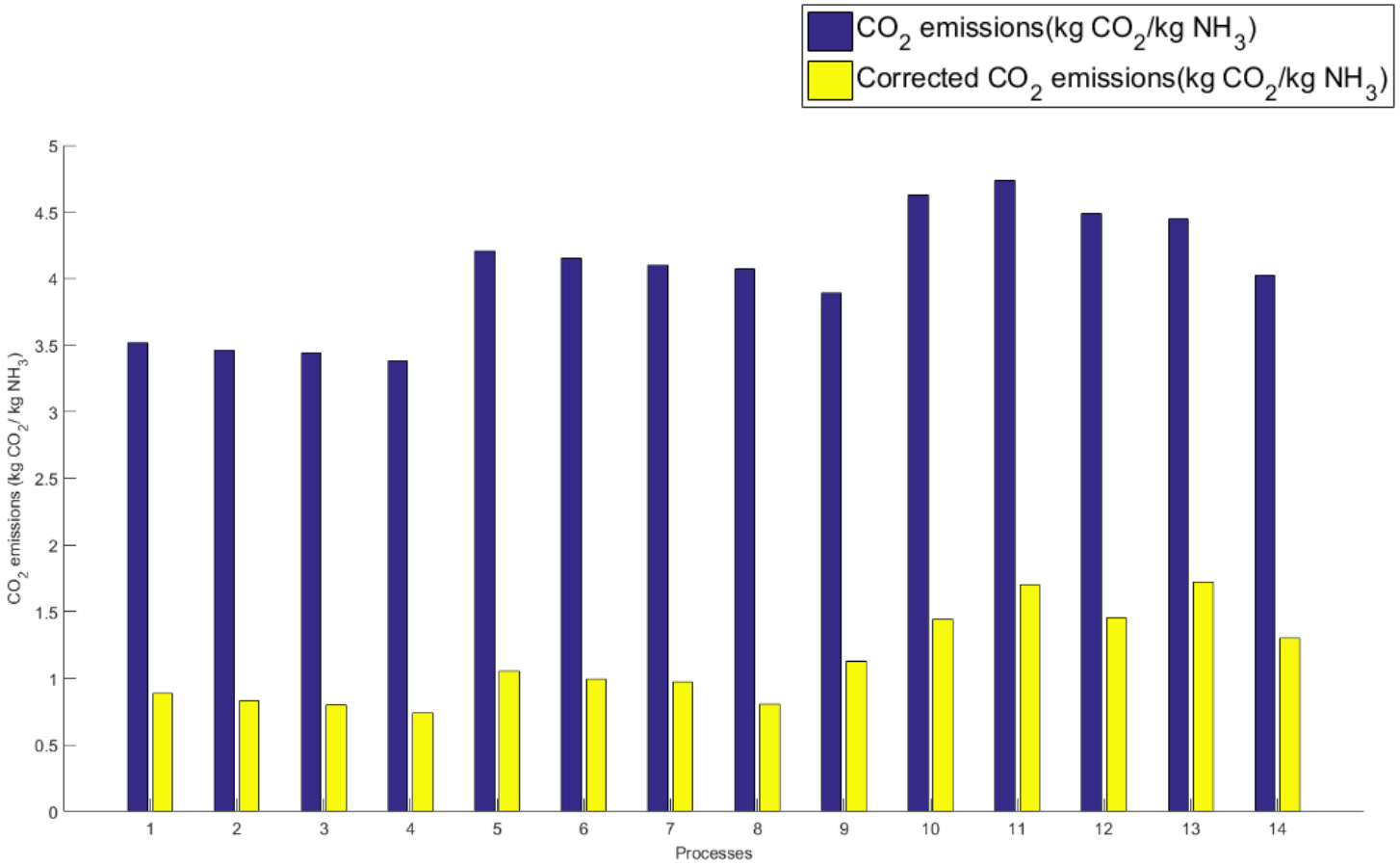

Current Processes: 3-4 kg CO_2/kg NH_3

Biogenic CO_2 is neglected

Results

Sensitivity Analysis

Biomass price

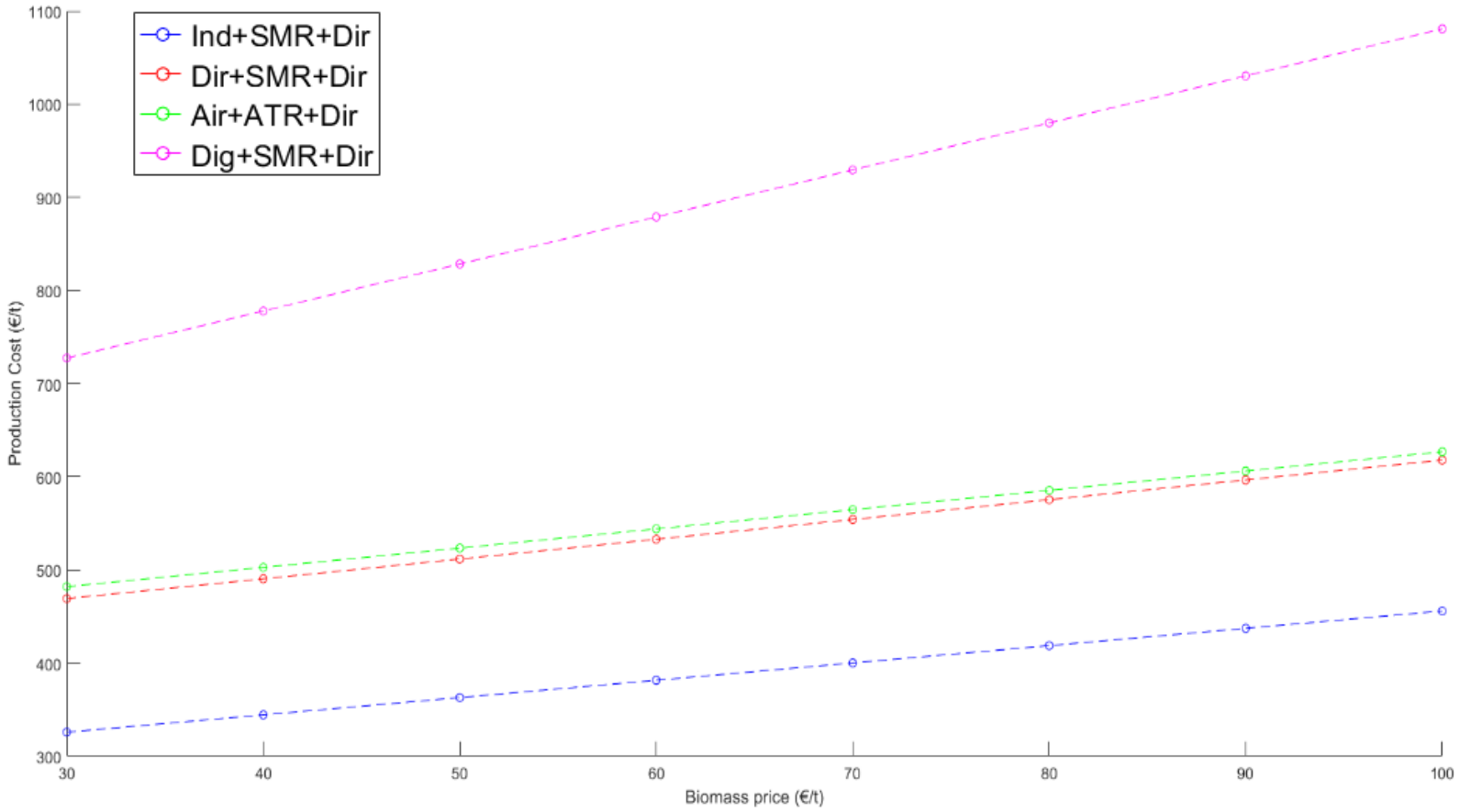

Different Biomass prices have been considered: 30-100 €/t

Results

Scale Analysis

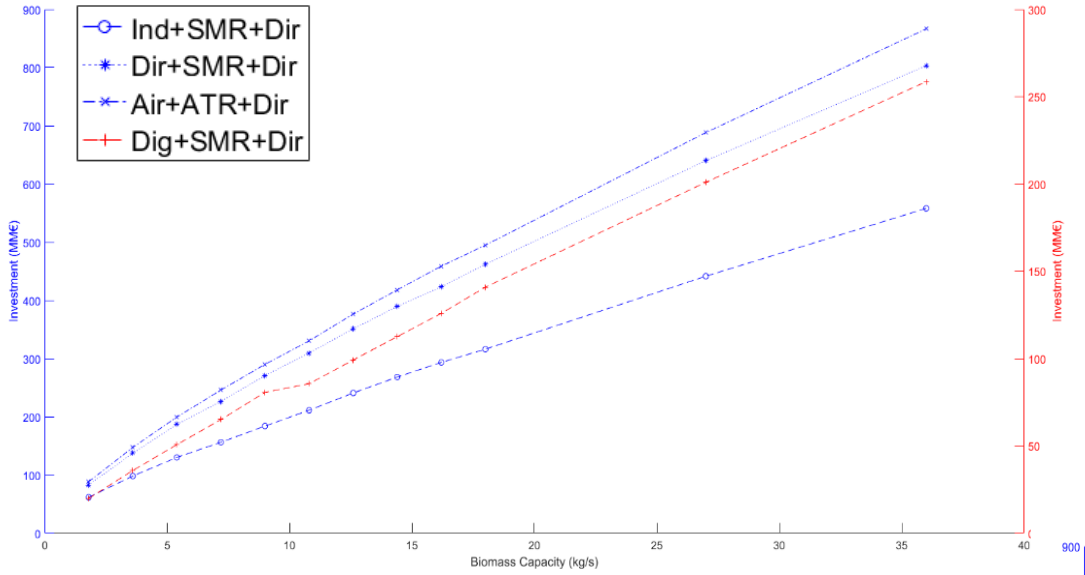

Capital Costs

Production Costs

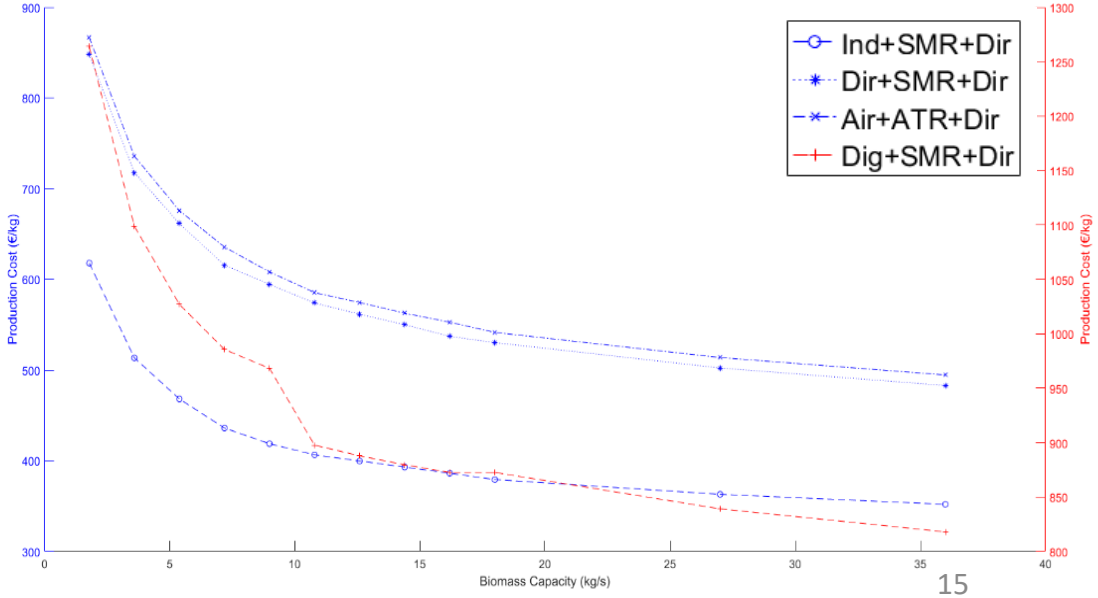

Conclusions

-Different path to produce ammonia from biomass have been evaluated

-Three gasification technologies and anaerobic digestion have been studied

-Two reformer alternatives and direct and indirect cooling reactors have been presented

-Indirect Gasifier with Steam Reforming and Direct Cooling is the most promising alternative in economic and environmental terms

-Digestion presents a worse performance in both index

-The influence of the biomass price and a scale analysis for the process is also presented

GOBIERNO DE ESPAÑA

MINISTERIO DE CIENCIA, INNOVACIÓN Y UNIVERSIDADES